| REV | DESCRIPTION | DRAWN | DATE |
|---|---|---|---|
| | | | |
| | | | |

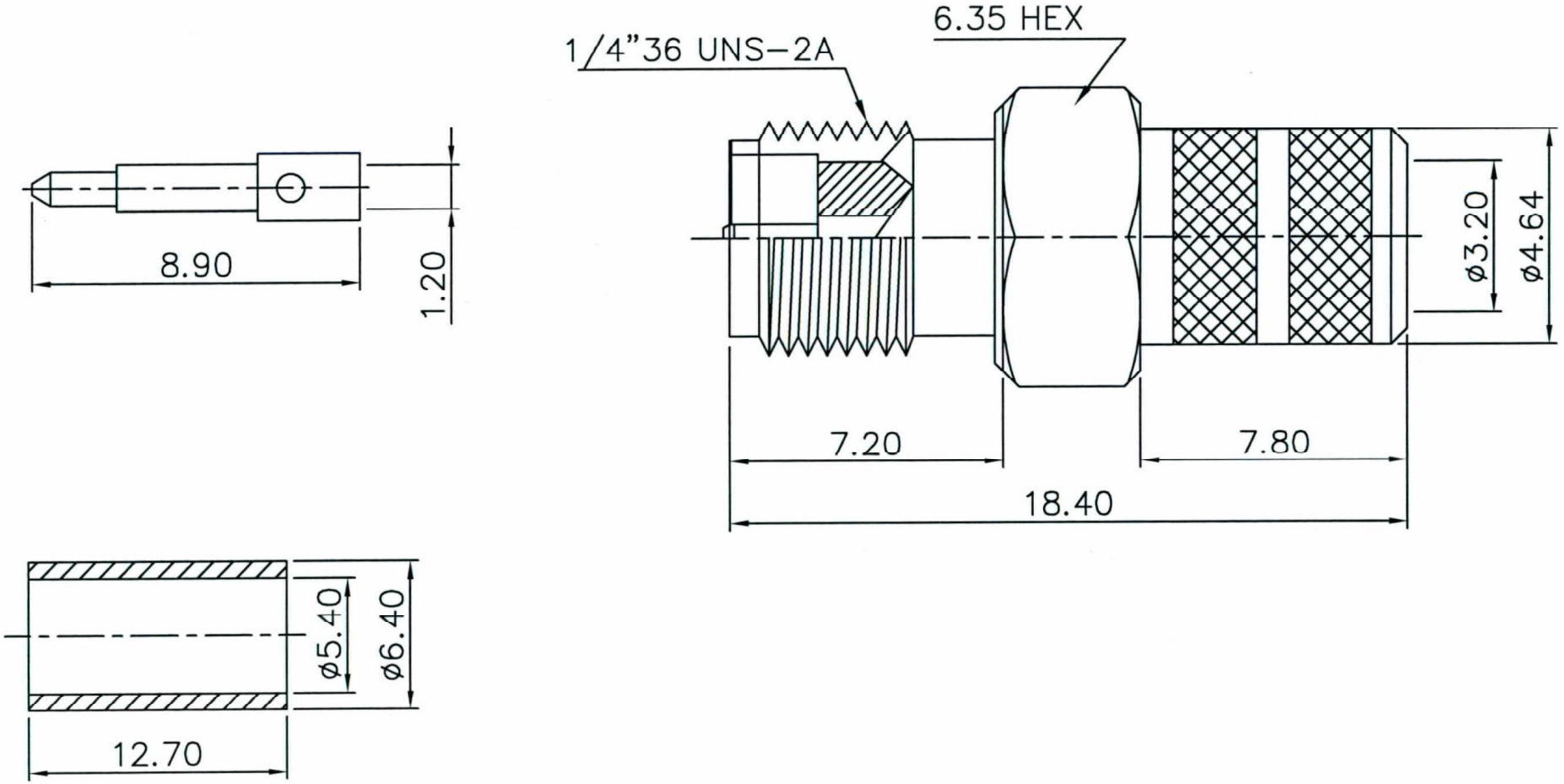


| NO | Description | Q'ty | Material | Finish |
|---|---|---|---|---|
| 4 | FERRULE | 1 | COPPER | GOLD |
| 3 | DIELECTRIC | 1 | TEFLON | NONE |
| 2 | PIN | 1 | BRASS | GOLD |
| 1 | BODY | 1 | BRASS | GOLD |

UNLESS OTHERWISE SPECIFIED
1. REMOVE ALL BURRS.
2. BREAK ALL CONNERS & EDGES CO.15 MAX.
3. CHAMFER 1ST & LAST THREADS 45°.
4. DIAMETERS ON COMMON CENTERS. TO BE CONCENTRIC WITHIN 0.1 T.I.R.
5. ALL DIMENSIONS ARE AFTER PLATING.

* MAJOR DIMENSION

UNLESS OTHERWISE NOTED TOLERANCES
0.5–6=±0.2
6–30=±0.4
30–120=±0.6
120–315=±1.0
ANGLES=±1°

SCALE 6/1 UNIT MM

APPROVED

CHECKED

DRAWN Betty

DRAWN DATE 06/11/20

TITLE SMA FEMALE RP CRIMP TYPE

DRAWING NO. SMA-1011-6-RP-F2-TGG

REV A

LY

FILE NO. D:\DWG\SMA FEMALE CRIMP TYPE\SMA-1011-6-RP-F2-TGG